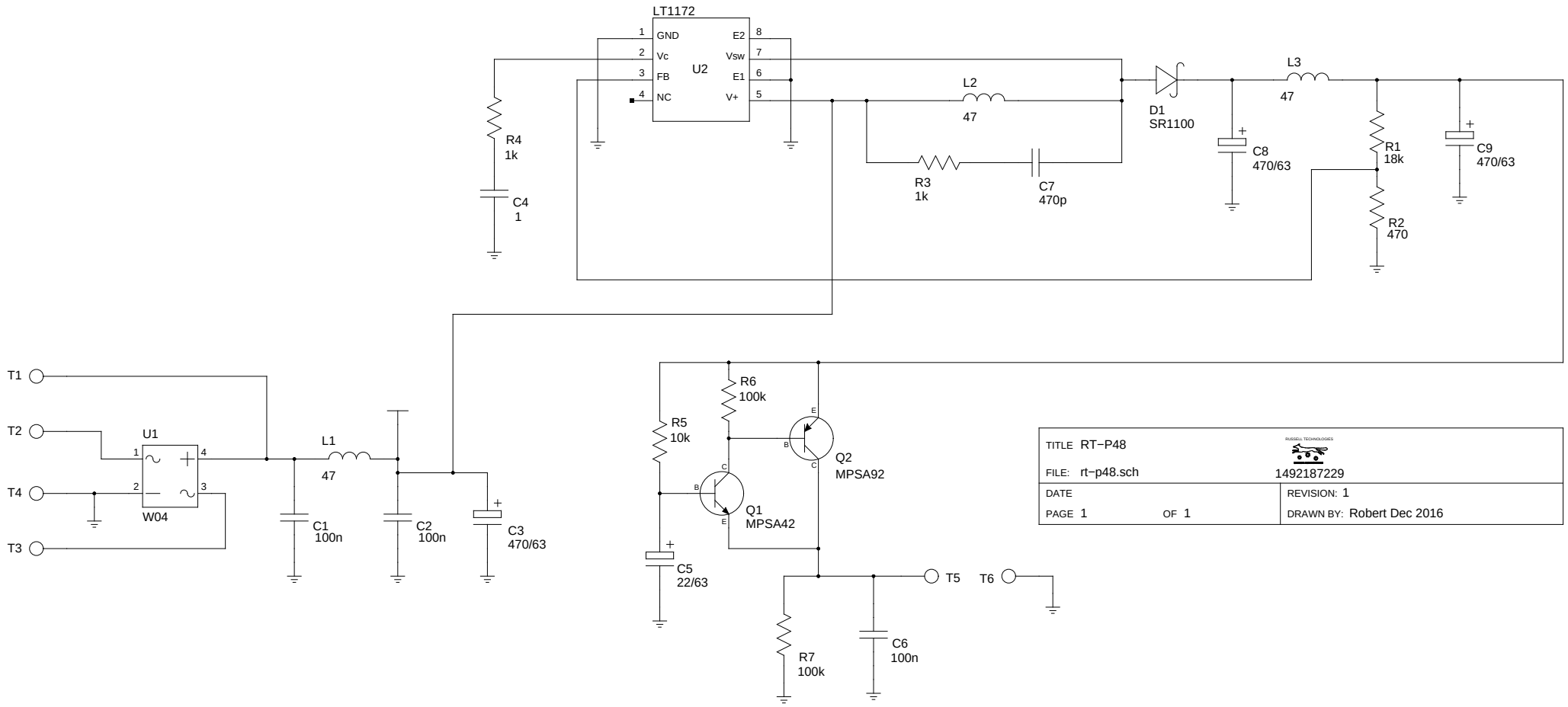

TITLE RT−P48	RUSSELL TECHNOLOGIES 1492187229
FILE: rt−p48.sch	
DATE	REVISION: 1
PAGE 1 OF 1	DRAWN BY: Robert Dec 2016