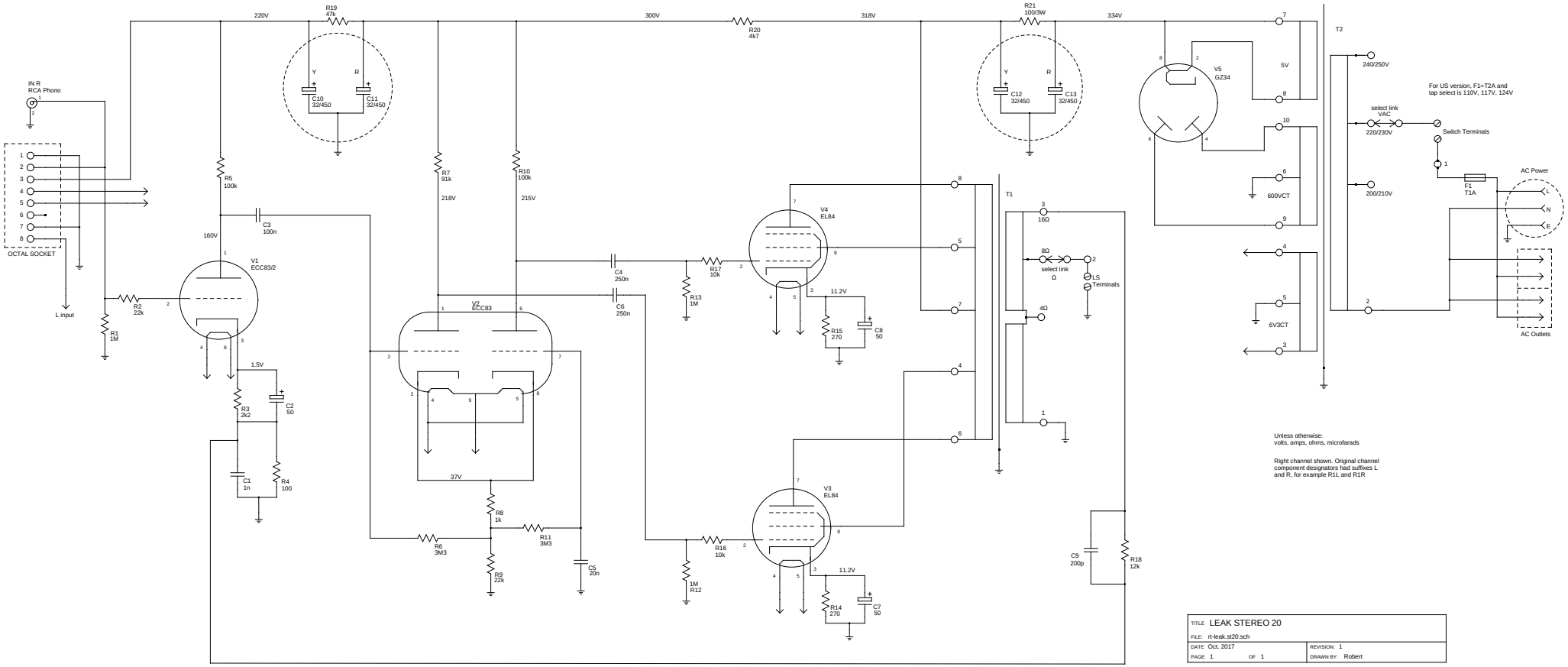

Unless otherwise:
volts, amps, ohms, microfarads

Right channel shown. Original channel
component designators had suffixes L
and R, for example R1L and R1R

TITLE: LEAK STEREO 20	
FILE: rt-leak.st20.sch	
DATE: Oct. 2017	REVISION: 1
PAGE 1 OF 1	DRAWN BY: Robert