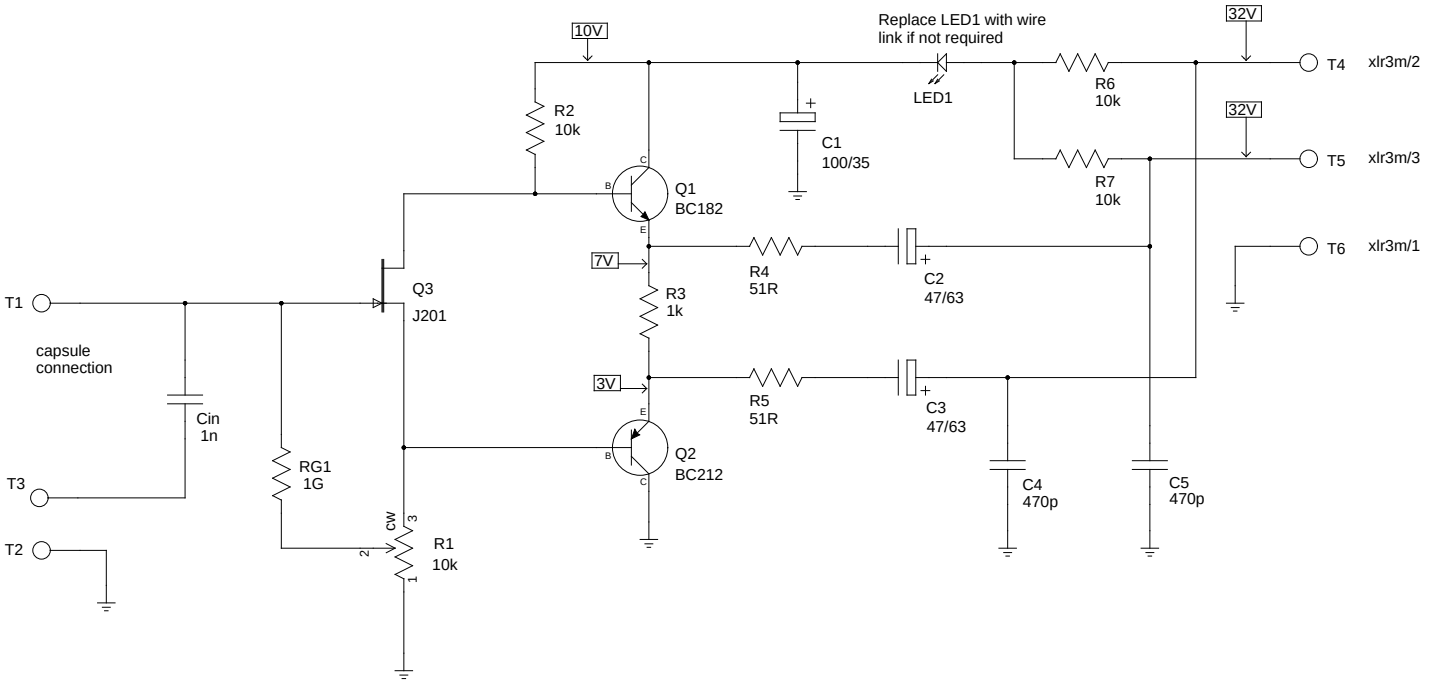

notes:

unless otherwise: volts, amps, ohms, microfarads.

TITLE RT−EM02	EM01−type amplifier for use with electret capsules without internal FET. Standard P48 phantom−power systems.
FILE: rt−em02.sch	REVISION:
PAGE 1 OF 1	DRAWN BY: Robert Sept 2011